PULEX™

UNIHANDLE

THE ONLY ANSWER



member of

IPC

MULTIFUNCTIONAL

The innovative Pulex **UNIHANDLE** (patent-pending) is an ergonomic handle, completely versatile and made with high quality materials. Matched with three different accessories, this handle is the answer to each window cleaning need.

1. COMBI VERSION
Equipped with **IPC microfiber pad**, this model allows even the most grimy windows to be washed and remove stubborn dirt.

2. SQUEEGEE VERSION
Matched with **high quality natural Pulex rubber**, it wipes perfectly without leaving marks or halos.

3. SCRAPER VERSION
This version, combined with scraper, easily removes even the most stubborn or encrusted dirt.

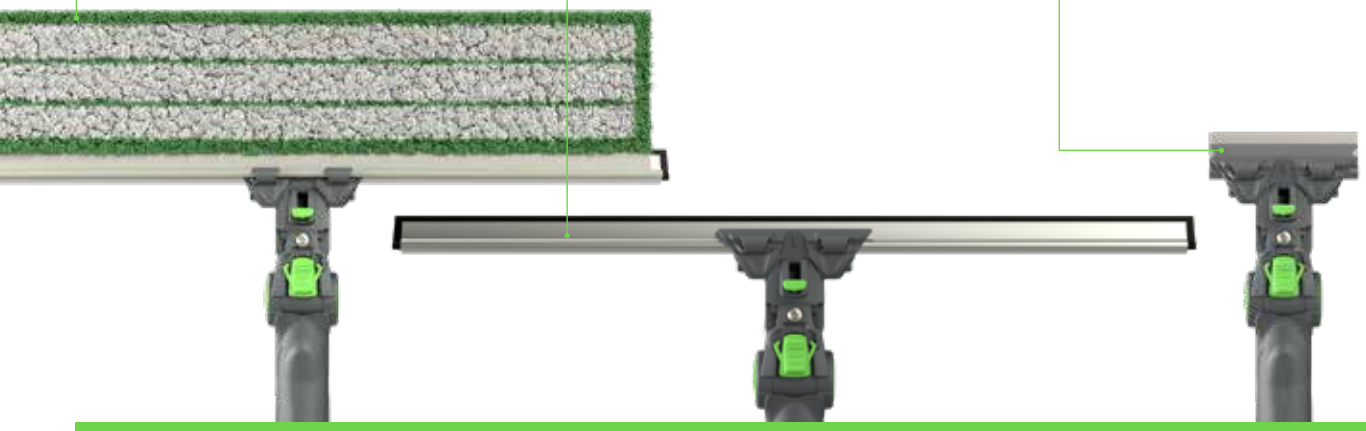

A ONE-PASS TOOL TO WASH AND WIPE AT THE SAME TIME, OPTIMIZING THE NORMALLY REQUIRED TIMES.

VERSATILE

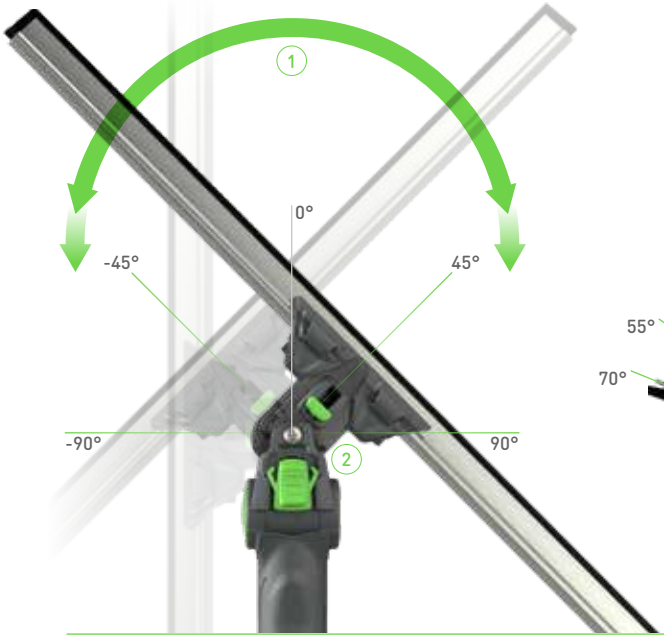

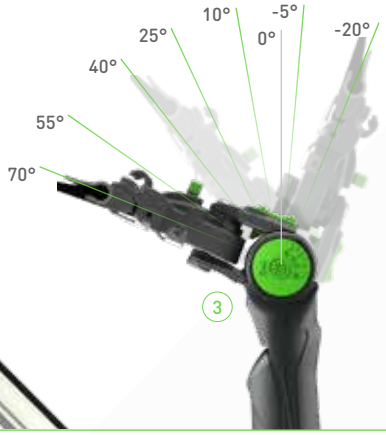

1. EXCLUSIVE PIVOTING SYSTEM
Fluid movement of rotation, free (up to +/- 180 °) or limited (up to +/- 150 °), which guarantees speed and efficiency.

2. ROTATION LOCKING
It is possible to stop the rotation movement in 5 different angular positions (0 °, +/- 45 °, +/- 90 °).

3. EXTRA-WIDE ADAPTABLE ANGLE
It allows the tool to be adjusted according to cleaning needs or your preferences (-20 °, -5 °, 10 °, 25 °, 40 °, 55 °, 70 °).

HIGH COMPATIBILITY

UNIVERSAL
The (patent pending) head is compatible with most channels and telescopic poles on the market.

EASY ON/OFF
of the telescopic poles with safety hole.

IDEAL FOR USE IN HEIGHT
... but not only.

MADE IN ITALY WITH HIGH QUALITY MATERIALS
Each component has been carefully selected to ensure the best performance.



IPC Tools SpA
Via dell'Artigianato II, 1 - 35010 Villa del conte (PD) - Italy
Tel. +39 049 9070625 - Fax +39 049 9070660

Divisione PULEX
Via 11 Settembre, 4 - Ronchi - 35010 Villafranca Padovana (PD) - Italy
info@ipcworldwide.com - www.ipcworldwide.com